TECHNICAL MANUAL

SC–42

INSTRUMENT CALIBRATION PROCEDURE

pH METERS

(HAVING pH TOLERANCES NOT BETTER THAN ±0.03 PH)

THIS PUBLICATION SUPERSEDES NAVAIR 17–20SC–42
DATED 1 DECEMBER 1994

DISTRIBUTION STATEMENT C. DISTRIBUTION AUTHORIZED TO U.S. GOVERNMENT AGENCIES AND THEIR CONTRACTORS TO PROTECT PUBLICATIONS REQUIRED FOR OFFICIAL USE OR FOR ADMINISTRATIVE OR OPERATIONAL PURPOSES ONLY. OTHER REQUESTS FOR THIS DOCUMENT SHALL BE REFERRED TO NAVY MEASUREMENT SCIENCE DIRECTORATE, NAVAL WARFARE ASSESSMENT STATION, P.O. BOX 5000 CORONA, CA 91718–5000

SC–42

DESTRUCTION NOTICE– FOR UNCLASSIFIED, LIMITED DOCUMENTS, DESTROY BY ANY METHOD THAT WILL PREVENT DISCLOSURE OF CONTENTS OR "RECONSTRUCTION OF THE DOCUMENT."

PUBLISHED BY DIRECTION OF COMMANDER NAVAL AIR SYSTEMS COMMAND

1 MAY 1998

LIST OF EFFECTIVE PAGES

The purpose of this list is to identify the pages in this document affected by any technical content changes made since the previous release of the document.

NOTE: On a revised page, with the exception of the Title, the A, and the i pages, the technical changes are indicated by a vertical line in the outer margin of the page.

Page No.	Revision*	Page No.	Revision*	Page No.	Revision*
Title	R				
A	R				
i	0				
1 to 3	0				
4	R				
5	0				
6	R				
7	0				
8	R				
9 to 11	0				
12	R				
13	0				
14 (blank)	0				
15 to 17	0				

* Zero in this column indicates an original page.
"R" in this column indicates a revised page.

TABLE OF CONTENTS

Section		Page
1	Introduction and Description	1
2	Equipment Requirements	1
3	Preliminary Operations	2
4	Calibration Process	3
4.1	Millivolt Indication Tests	3
4.2	PH Indication Tests	4
4.3	PH Calibration Tests	4
4.4	Temperature Indication Tests	5
	Navy Calibration Checklist	7

ILLUSTRATIONS

Figure		Page
1	mV/pH Indication Test Setup	3

TABLES

Table		Page
1	Calibration Description	1
2	Equipment Requirements	2

SECTION 1

INTRODUCTION AND DESCRIPTION

1.1 This procedure describes the calibration of pH Meters having pH tolerances not better than ±0.03 pH. The instrument being calibrated is referred to herein as the TI (Test Instrument).

1.2 All comments concerning this procedure should be directed to Navy Measurement Science Directorate, Naval Warfare Assessment Station, P.O. Box 5000, Corona, CA 91718–5000.

1.3 This procedure includes tests of essential performance parameters only. Any malfunction noticed during calibration, whether specifically tested for or not, should be corrected.

Table 1. Calibration Description

TI Characteristics	Performance Specifications	Test Method
mV indication	Range: –1991 to +1999 mV Tolerance: ±1 mV, ±1 LSD	TI indications are compared to a DC millivolt standard.
pH indication	Range: 0 to 14 pH Tolerance: ±0.03 pH	TI indications are compared to a DC millivolt standard.
pH calibration	Range: 0 to 14 pH Tolerance: ±0.03 pH (relative)	Compared to standard pH buffers.
Temperature indication	Range: 0 to 99.9 °C Tolerance: ±0.5 °C Range: –50 to 150 °C Tolerance: ±5 °C	TI indications are compared to a digital thermometer.

SECTION 2

EQUIPMENT REQUIREMENTS

NOTES

Minimum use specifications are the principal parameters required for performance of the calibration, and are included to assist in the selection of alternate equipment, which may be used at the discretion of the using laboratory. Satisfactory performance of alternate items shall be verified prior to use. All applicable equipment must bear evidence of current calibration.

The instruments utilized in this procedure were selected from those known to be available at Navy calibration facilities, and the listing by make or model number carries no implication of preference, recommendation, or approval for use by other agencies. It is recognized that equivalent equipment produced by other manufacturers may be capable of equally satisfactory performance in this procedure.

Table 2. Equipment Requirements

Item	Minimum Use Specifications	Calibration Equipment
2.1 DC millivolt source	Range: 0 to 1999 mV Uncertainty: ±0.01% of setting, ±20 µV	Valhalla 2720 GS
2.2 Digital thermometer	Range: 15 to 30 °C Uncertainty: ±0.125 °C	Wahl 392M
2.3 Temperature chamber	Range: ambient Uncertainty: NA	Leeds and Northrup 93301
2.4 BNC shorting connector		Lab stock
2.5 Alignment tool	Fit #4 or #6 stud on trimpots	General Cement 8867 or Local supply
2.6 Standard premixed buffers	Range: 4.01, 7.00 and 10.01 pH Uncertainty: Refer to certificates of traceability	Omega PHA–4, PHA–7 & PHA–10 or Orion 910104, 910107 & 910110
2.7 pH electrode(s)	Supplied with TIs: Corning M103 Beckman PHI 31 Orion Research 201 Beckman 2000 VWR Scientific 34100–674 (with temperature sensor affixed)	Corning 00311207H Beckman 39848 or 39841 Orion Research 91–06 Beckman 39099
2.8 ATC temperature probe(s)	Supplied with TIs: Beckman PHI 31	Beckman 598115 or VWR Scientific 34100–787

SECTION 3

PRELIMINARY OPERATIONS

3.1 TEST CONTROL SETTINGS

3.1.1 Ensure that all power switches are set to off, and set all auxiliary equipment controls as necessary to avoid damage to the equipment and so that dangerous voltages will not be present on output terminals when the power switches are turned on.

3.1.2 Disconnect the TI electrode(s). If an ATC temperature probe is supplied, ensure it is also disconnected from the TI.

3.1.3 Short the TI pH input connector using the BNC shorting connector (item 2.4). If the TI is the Beckman 2000, short the G.E. connector on the rear panel.

3.1.4 Set the TI controls as specified on the applicable TI checklist.

3.1.5 Verify that the TI indicates within the specified limits (refer to applicable TI checklist).

3.1.6 Repeat step 3.1.3 through 3.1.4, where applicable.

SECTION 4

CALIBRATION PROCESS

NOTE

Unless otherwise specified, verify the results of each test and take corrective action whenever the test requirement is not met, before proceeding.

4.1 MILLIVOLT INDICATION TESTS

4.1.1 Ensure that the DC millivolt source (item 2.1) is in the standby mode and then connect the equipment as shown in Figure 1.

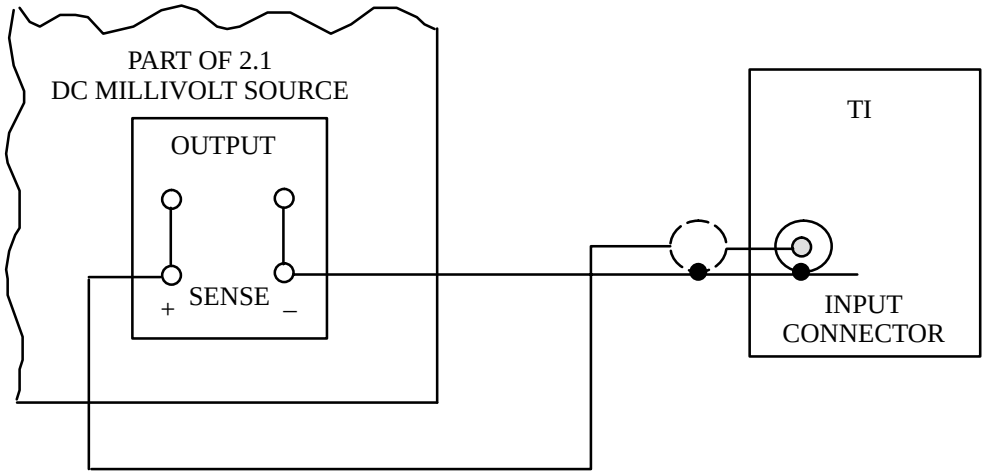

Figure 1. mV/pH Indication Test Setup

CAUTION

ENSURE THAT THE + AND – OUTPUT AND SENSE TERMINALS ARE PROPERLY CONNECTED ON THE FRONT PANEL OF THE DC MILLIVOLT SOURCE.

4.1.2 Set the DC millivolt source controls for zero output.

4.1.3 Set the TI controls to measure MV and note the TI indication. Refer to the applicable TI checklist for specified tolerance. If the TI indication is greater than specified, adjust the TI control listed on the applicable checklist for a zero indication. Use the alignment tool (2.5) if required.

4.1.4 Refer to applicable TI checklist. Set the DC millivolt source and TI controls as necessary for a millivolt indication at each setting. (For negative outputs, reverse the leads connected to the DC millivolt source output terminals). Verify that the TI indications are within the limits specified.

4.1.5 Set the DC millivolt source for a zero output.

4.2 PH INDICATION TESTS

NOTE

The following test results will be invalid unless the ambient temperature of the TI can be maintained within 69 to 77 degrees F.

4.2.1 Connect the equipment as shown in Figure 1. (Remove the BNC shorting connector or G.E. shorting plug). Connect the temperature probe plug to the TI small input connector adjacent to the input connector.

4.2.2 Set the TI controls as specified on the applicable checklist. Standardize TI to a display reading of 7.00. This is to be done with zero volts applied to the input connector and the slope control at 100.

4.2.3 Adjust the DC millivolt source output to obtain each of the values on the applicable checklist. (For negative outputs, reverse the leads connected to the DC millivolt source output terminals). Verify that the TI indications are within the limits specified.

4.2.4 Set the DC millivolt source for zero output and disconnect from the TI.

4.3 PH CALIBRATION TESTS

4.3.1 Connect the appropriate ATC temperature probe (item 2.8) to the TI. Ensure that any temperature sensor is plugged into the TI ph electrode, where applicable.

NOTE

Some TIs utilize manual temperature compensation only. In such cases, no ATC temperature probe is required.

4.3.2 Connect the applicable pH electrode (item 2.7) to the appropriate input connector of the TI.

CAUTION

AVOID HANDLING THE TI ELECTRODE MEMBRANE. ANY DAMAGE TO ITS SURFACE CAUSED BY ABRASION WILL LEAD TO INACCURACY AND SLOW RESPONSE.

CAUTION

DO NOT USE STANDARD PREMIXED BUFFER SOLUTIONS (ITEM 2.6) AFTER THE EXPIRATION DATE SHOWN ON THE LABEL AND DO NOT POUR SOLUTIONS BACK INTO THE BOTTLE.

4.3.3 Place the TI electrode into the 7.00 pH standard premixed buffer (item 2.6).

NOTE

The TI electrode has a typical shelf life of approximately one year. IF the TI electrode has aged beyond this point or is defective, pH calibration may be impossible. In this case, the TI electrode should be replaced and the pH calibration performed.

4.3.4 Set the TI controls as specified on the applicable checklist.

NOTE

For TIs that use manual temperature compensation only, place the digital thermometer probe (item 2.2) near the pH buffer solution being measured without coming in direct contact with it. Allow the buffer to stabilize at ambient conditions, then adjust the appropriate TI control (refer to applicable TI checklist) to the temperature indication of the digital thermometer.

CAUTION

WHEN TRANSFERRING THE TI ELECTRODE FROM ONE BUFFER SOLUTION TO ANOTHER, THE TI ELECTRODE SHOULD BE RINSED WITH THE BUFFER SOLUTION THAT IS TO BE MEASURED. THE TI ELECTRODE MAY BE BLOTTED WITH TISSUE PAPER. DO NOT WIPE THE TI ELECTRODE, AS IT MAY RESULT IN SLIGHT POLARIZATION AND CONSEQUENT SLUGGISHNESS OF RESPONSE.

4.3.5 Rinse the TI electrode and place into the 4.01 pH standard premixed buffer.

4.3.6 Set the TI controls as specified on the applicable TI checklist.

4.3.7 Repeat steps 4.3.3 through 4.3.5.

4.3.8 Verify that the TI indicates within the specified limits (refer to applicable TI checklist).

4.3.9 Repeat steps 4.3.3 through 4.3.7, except use the 10.01 pH standard premixed buffer instead of the 4.01 ph buffer.

4.3.10 Verify that the TI indicates within the specified limits (refer to applicable TI checklist).

4.3.11 Rinse the TI electrode and disconnect from the TI.

4.4 TEMPERATURE INDICATION TESTS

4.4.1 Set the TI controls as specified on the applicable TI checklist.

4.4.2 If the TI requires an ATC temperature probe to make temperature measurements, connect it to the appropriate TI connector.

4.4.3 Place the TI and the digital thermometer probe (item 2.2) into a temperature chamber (item 2.3), positioning the TI so that the digital readout can be read through the chamber window. Ensure that the chamber door is closed and the chamber equipment port is properly sealed.

NOTE

If the TI has an ATC probe, the probe should be placed near the digital thermometer probe without coming in direct contact with it. If the TI does not have an ATC probe, then place the digital probe next to the base of the TI.

4.4.4 Set and allow the temperature chamber and TI to stabilize at 25°C (77°F) and verify that the TI indicates within the specified limits of the standard digital thermometer indication. (Refer to applicable TI checklist).

NOTE

Some TIs have a timed automatic shutoff. The above TI comparison to the digital thermometer should be completed within approximately 30 minutes, otherwise some TIs will automatically shut off.

4.4.5 Remove the TI from the temperature chamber.

4.4.6 Attach a Special Calibration label to the TI stating that only the meter has been calibrated.

4.4.7 If no other measurements are to be performed, disconnect and secure all the necessary equipment.

CALIBRATION CHECKLIST

TEST INST (S) Beckman Instruments pHI 31 pH Meter

PROC. NO.	NA 17–20SC–42	MFG.	MODEL			SER. NO.
PROCEDURE STEP NO. (1)	FUNCTION TESTED (2)	NOMINAL (3)	MEASURED VALUES FIRST RUN (4)	SECOND RUN (5)	OUT OF TOL (6)	CALIBRATION TOLERANCES (7)
3.1	Test Control Settings					
	TI control(s):					
3.1.4	STD Key |/ _					
	(Press and allow TI display to					
	stabilize)					
		(pH)				(pH)
3.1.5	TI operational check	7.00				6.97 to 7.03
3.1.6	TI control(s): (Remove BNC					
	short) pH key (press) TI					
	display drifts		ck ( )		NA	
4.2	PH Indication Tests					
4.2.2	TI control(s):					
	pH key (press)					
4.2.3	(DC millivolt source)					
	(mV)	(pH)				(pH)
	295.80	2.00				1.97 to 2.03
	177.50	4.00				3.97 to 4.03
	59.20	6.00				5.97 to 6.03
	–59.20	8.00				7.97 to 8.03
	–177.50	10.00				9.97 to 10.03
	–295.80	12.00				11.97 to 12.03
4.3	PH Calibration Tests					
4.3.4	TI control(s):					
	CLR key (press)					
	STD Key |/ _(press)					
	for TI display					
	STD 1 of approx. 7.00		ck ( )		NA	

CALIBRATION CHECKLIST

TEST INST (S) Beckman Instruments pHI 31 pH Meter

PROC. NO.	NA 17–20SC–42	MFG.	MODEL		SER. NO.	
PROCEDURE STEP NO. (1)	FUNCTION TESTED (2)	NOMINAL (3)	MEASURED VALUES FIRST RUN (4)	MEASURED VALUES SECOND RUN (5)	OUT OF TOL (6)	CALIBRATION TOLERANCES (7)
4.3.6	TI control(s):					
	STD Key |/ _(press)					
	for TI display					
	STD 2 of approx. 4.01		ck ( )		NA	
4.3.8	pH measurement					
	(press pH key)	(pH)				(pH)
		4.01				3.98 to 4.04
4.3.9	STD 2 of approx. 10.01		ck ( )		NA	
4.3.10	pH measurement	(pH)				(pH)
	(press pH key)	10.01				9.98 to 10.04
4.4	Temperature Indication Tests					
4.4.4	TI temperature indication	25°C				±0.5° C of std, Ind.

CALIBRATION CHECKLIST

TEST INST (S) Corning M103 pH Meter

PROC. NO.	NA 17–20SC–42	MFG.	MODEL			SER. NO.
PROCEDURE STEP NO. (1)	FUNCTION TESTED (2)	NOMINAL (3)	MEASURED VALUES FIRST RUN (4)	SECOND RUN (5)	OUT OF TOL (6)	CALIBRATION TOLERANCES (7)
3.1	Test Control Settings					
3.1.4	TI control(s):					
	MODE switch to MV					
		(mV)				(mV)
3.1.5	TI operational check	0.00				–002 to 002
3.1.6	TI control(s):					
	MODE switch to pH					
	TEMP. to 25°C					
	CAL 2Δ% to midrange					
	(Accessible through hole					
	in TI connector panel)					
	Calib. for TI display of 7.00					
			ck ( )		NA	adjust
4.1	Millivolt Indication Tests					
		(mV)				(mV)
4.1.3	Zero indication	000				–002 to 002
4.1.4	MV Range	(mV)				(mV)
		1500				1498 to 1502
		200				198 to 202
		400				398 to 402
		600				598 to 602
		800				798 to 802
		1000				998 to 1002
		–1500				–1498 to –1502
		–1000				–998 to –1002
		–800				–798 to –802
		–600				–598 to –602
		–400				–398 to –402
		–200				–198 to –202

CALIBRATION CHECKLIST

TEST INST (S) Corning M103 pH Meter

PROC. NO.	NA 17–20SC–42	MFG.	MODEL			SER. NO.
PROCEDURE STEP NO. (1)	FUNCTION TESTED (2)	NOMINAL (3)	MEASURED VALUES FIRST RUN (4)	SECOND RUN (5)	OUT OF TOL (6)	CALIBRATION TOLERANCES (7)
4.2	PH Indication Tests					
4.2.2	TI control(s):					
	MODE switch to pH					
	TEMP °C to 25 CALIB.					
	for TI display of 7.00		ck ( )		NA	
4.2.3	(DC millivolt source)					
	(mV)	(pH)				(pH)
	295.000	2.00				1.97 to 2.03
	177.000	4.00				3.97 to 4.03
	59.000	6.00				5.97 to 6.03
	–59.000	8.00				7.97 to 8.03
	–177.000	10.00				9.97 to 10.03
	–295.000	12.00				11.97 to 12.03
4.3	PH Calibration Tests					
4.3.4	TI control(s):					
	MODE sw to PH					
	Adjust TEMP to std.					
	digital thermometer indication		ck ( )		NA	adj. to std. Ind.
	Adjust CALIB for TI display					
	of 7.00		ck ( )		NA	adjust
4.3.6	Adjust TEMP to std.					
	digital thermometer indication		ck ( )		NA	adj. to std. Ind.
	Adjust 2Δ% for TI display					
	of 4.01		ck ( )		NA	adjust
4.3.8	pH measurement	(pH)				(pH)
		4.01				3.98 to 4.04
4.3.10	pH measurement	(pH)				(pH)
		10.01				9.98 to 10.04

CALIBRATION CHECKLIST

TEST INST (S) VWR Scientific 34100–674 pH Meter

PROC. NO.	NA 17–20SC–42	MFG.	MODEL			SER. NO.
PROCEDURE STEP NO. (1)	FUNCTION TESTED (2)	NOMINAL (3)	MEASURED VALUES FIRST RUN (4)	SECOND RUN (5)	OUT OF TOL (6)	CALIBRATION TOLERANCES (7)
3.1	Test Control Settings					
3.1.4	TI control(s):					
	FUNCTION switch to MV					
	Adjust isopotential pot.					
	until TI display reads “000”.					
	(Remove TI back cover for					
	access)					
3.1.5	TI operational check	000	ck ( )		NA	adjust
4.1	MV Indication Tests					
4.1.3	Zero Indication					(mV)
						000 to 002
4.1.5	MV RANGE	(mV)				(mV)
		1500				1498 to 1502
		1000				998 to 1002
		800				798 to 802
		600				598 to 602
		400				398 to 402
		200				198 to 202
4.2	PH Indication Tests					
4.2.2	TI Control(s):					
	FUNCTION sw. to pH					
4.2.3	(DC Millivolt source)					
	(mV)	(pH)				(pH)
	295.000	2.00				1.97 to 2.03
	177.000	4.00				3.97 to 4.03
	59.000	6.00				5.97 to 6.03
	–59.000	8.00				7.97 to 8.03
	–177.000	10.00				9.97 to 10.03
	–295.000	12.00				11.97 to 12.03

CALIBRATION CHECKLIST

TEST INST (S) VWR Scientific 34100–674 pH Meter

PROC. NO. NA 17–20SC–42 MFG. MODEL SER. NO.

PROCEDURE STEP NO. (1)	FUNCTION TESTED (2)	NOMINAL (3)	MEASURED VALUES FIRST RUN (4)	MEASURED VALUES SECOND RUN (5)	OUT OF TOL (6)	CALIBRATION TOLERANCES (7)
4.3	PH Calibration Tests					
4.3.4	TI control(s):					
	FUNCTION sw. to PH					
	Adjust STANDARDIZE					
	for TI display of 7.00					adjust
4.3.6	TI control(s):					
	Adjust SLOPE for TI					
	display of 4.01		ck ( )		NA	adjust
4.3.8	pH measurement	pH)				(pH)
		4.01				3.98 to 4.04
4.3.10	pH measurement	(pH)	ck ( )		NA	(pH)
		10.01				9.98 to 10.04
4.4	Temperature Indication Tests					
4.4.1	TI control(s):					
	FUNCTION sw. to TEMP					
4.4.4	TI temperature indication	25°C				±5° C of std. ind.

CALIBRATION CHECKLIST

TEST INST (S) Orion Research 201 Digital pH Meter

PROC. NO.	NA 17–20SC–42	MFG.	MODEL			SER. NO.
PROCEDURE STEP NO. (1)	FUNCTION TESTED (2)	NOMINAL (3)	MEASURED VALUES FIRST RUN (4)	SECOND RUN (5)	OUT OF TOL (6)	CALIBRATION TOLERANCES (7)
3.1	Test Control Settings					
	TI Control(s):					
3.1.4	TEMP °C	29 °C				
3.1.5	Adjust CALIB for TI display					
	of 7.00		ck( )		NA	
4.2	PH Indication Tests					
4.2.3	(DC millivolt source)					
	(mV)	(pH)				(pH)
	299.8	2.00				1.95 to 2.05
	179.9	4.00				3.95 to 4.05
	59.96	6.00				5.95 to 6.05
	–59.96	8.00				7.95 to 8.05
	–179.9	10.00				9.95 to 10.05
	–299.8	12.00				11.95 to 12.05
4.3	PH Calibration Tests					
4.3.4	TI Control(s):					
	Adjust TEMP °C to digital					
	thermometer indication		ck( )		NA	
	STD 1 of approx 7.00		ck( )		NA	
4.3.6	TI Control(s):					
	Adjust TEMP °C to digital					
	thermometer indication		ck( )		NA	
	STD 2 of approx. 4.01		ck( )		NA	
4.3.8	pH measurement					
		(pH)				(pH)
		4.01				3.95 to 4.05
4.3.9	STD 3 of approx. 10.01		ck( )		NA	
4.3.10	pH measurement					
		(pH)				(pH)
		10.01				9.95 to 10.05

CALIBRATION CHECKLIST

TEST INST (S) Beckman Instruments 2000 Ion Analyzer

PROC. NO. NA 17–20SC–42 MFG. MODEL SER. NO.

PROCEDURE STEP NO. (1)	FUNCTION TESTED (2)	NOMINAL (3)	MEASURED VALUES FIRST RUN (4)	MEASURED VALUES SECOND RUN (5)	OUT OF TOL (6)	CALIBRATION TOLERANCES (7)
3.1	Test Control Settings					
	TI control(s):					
3.1.4	Depress pH, EXP, and STBY					
	pushbuttons					
	TI TEMPERATURE and					
	SLOPE controls to OFF					
	MIDSCALE VALUE set to 7					
3.1.5	Release STBY pushbutton					
	adjust needle to 0 on the					
	±0.7 scale	0	ck( )		NA	
4.1	Millivolt Indication Tests					
4.1.3	Depress +mV and ABS					
	pushbuttons					
	Release EXP pushbuttons					
	Zero Indication	(mV)				(mV)
		0				–2 to +2
4.1.4	mV Range	(mV)				(mV)
		1300				1298 to 1302
		1100				1098 to 1102
		900				898 to 902
		700				698 to 702
		500				498 to 502
		300				298 to 302
		100				98 to 102
	Depress TI – mV pushbutton					
		–100				–98 to –102
		–300				–298 to –302
		–500				–498 to –502
		–700				–698 to –702
		–900				–898 to –902

CALIBRATION CHECKLIST

TEST INST (S) Beckman Instruments 2000 Ion Analyzer

PROC. NO.	NA 17–20SC–42	MFG.	MODEL			SER. NO.
PROCEDURE STEP NO. (1)	FUNCTION TESTED (2)	NOMINAL (3)	MEASURED VALUES FIRST RUN (4)	SECOND RUN (5)	OUT OF TOL (6)	CALIBRATION TOLERANCES (7)
		(mV)				(mV)
4.1.4	Depress TI – mV pushbutton	–1100				–1098 to –1102
		–1300				–1298 to –1302
4.2	pH Indication Tests					
4.2.2	TI Controls(s):					
	Depress STBY, pH, and EXP					
	pushbuttons					
	Set TEMPERATURE control to					
	30 adjust STANDARDIZE					
	CONTROL for TI reading of 7.00	ck( )		NA		
4.2.3	(DC millivolt source)					
	(mV)	(pH)				(pH)
	300.8	2.00				1.99 to 2.01
	180.5	4.00				3.99 to 4.01
	60.15	6.00				5.99 to 6.01
	–60.15	8.00				7.99 to 8.01
	–180.5	10.00				9.99 to 10.01
	–300.8	12.00				11.99 to 12.01
4.3	pH Calibration Tests					
4.3.4	TI control(s):					
	Depress pH, EXP, and STBY					
	pushbuttons					
	TI TEMPERATURE					
	and SLOPE controls to OFF					
	Set MIDSCALE VALUE control to 7					
	Ensure Zero pushbutton on					
	rear panel is released					
	Release STBY pushbutton					
	Adjust needle to 0 on the ±0.7 scale	0	ck( )		NA	
	Depress STBY pushbutton					

CALIBRATION CHECKLIST

TEST INST (S) Beckman Instruments 2000 Ion Analyzer

PROC. NO. NA 17–20SC–42 MFG. MODEL SER. NO.

PROCEDURE STEP NO. (1)	FUNCTION TESTED (2)	NOMINAL (3)	MEASURED VALUES FIRST RUN (4)	MEASURED VALUES SECOND RUN (5)	OUT OF TOL (6)	CALIBRATION TOLERANCES (7)
4.3.6	TI conrol(s):					
	Set MID SCALE VALUE					
	control to 4					
	Release STBY pushbutton					
	Adjust SLOPE					
	control until needle is at					
	pH 4, center scale		ck( )		NA	
4.3.8	pH Measurement	(pH)				(pH)
		4.01				3.4 to 4.08
4.3.10	pH Measurement					
	Set MIDSCALE VALUE					
	control to 7		ck( )		NA	
		(pH)				(pH)
		10.01				9.4 to 10.08